RSL161/RSL161i

Heavy-duty Li-ion Stacker with Foldable Platform 1600kg

Let's grow together

LI-ION TECHNOLOGY

- Heavy-duty stacker with foldable platform for demanding applications and long-distance transportation
- Initial lifting version allowing for smooth travel on uneven surfaces and double decking possibility
- Productivity boost thanks to the fast lifting, lowering and travelling speed (11km/h)
- Powerful lithium battery offering rapid and opportunity charging and zero maintenance
- New foldable platform with shock-absorbing suspension for driving comfort
- Electronic power steering with turn speed reduction lowering operation fatigue and increasing safety
- Proportional lifting and lowering fork control for gentle and accurate stacking
- New color display for easy parameter monitoring

CE

Manufacturer			EP	EP
Model designation			RSL161	RSL161i
Drive			Electric	Electric
Load capacity	Q	kg	1600	2000
Load center distance	c	mm	600	600
Service weight		kg	1200	1340
Lift height	h3	mm	2915	2915
Height, mast extended	h4	mm	3425	3495
Initial lift	h5	mm	\	120
Length to face of forks	l2	mm	821	971
Overall width	b1/b2	mm	850	850
Fork dimensions	s/e/l	mm	65×170×1150	60×185×1150
Turning radius	Wa	mm	1560	1900
Max. gradeability, laden/unladen		%	8/12	8/16
Travel speed, laden/unladen		km/h	9/11	9/11
Lifting speed, laden/unladen		m/s	0.2/0.26	0.2/0.26
Lowering speed, laden/unladen		m/s	0.4/0.36	0.4/0.36
Battery voltage/nominal capacity		V/Ah	24/205	24/205
Energy consumption according to DIN EN 16796		kWh/h	1.01	1.01
Turnover output according to VDI 2198		t/h	54.4	54.4
Turnover efficiency according to VDI 2198		t/kWh	37	37

EP EQUIPMENT CO.,LTD
www.ep-equipment.com

V2505.01

FEATURES

Maximum Performance for Professional Users

The RSL161 of standard version and Initial lifting version is the perfect choice for professional users who require a high-performance electric stacker. It' s designed for efficient material handling in large warehouses and industrial environments where operators usually stack and transport goods over medium to long distances. The RSL161i allows for smooth travel on uneven roads and double decking capability.

Designed around Lithium Battery Advantages

Equipped with a powerful 24V 205Ah Lithium-ion battery, the RSL series offers all the advantages of lithium technology which features a compact design and grants long operation, short downtime and extremely long battery life with no maintenance requirement. The external charging plug makes the charging process efficient and user-friendly - no need to open battery compartment and remove plugs any more. And the full re-charge time can be less than 2 hours.

Improved Foldable Operator Platform

The newly designed foldable operator platform enhances both comfort and maneuverability, making the RSL series ideal for both long-distance travel in large warehouses and usage in tight spaces. Its shock-absorbing suspension ensures a smooth and stable ride, reducing operator fatigue over extended shifts. When folded, the stacker becomes more compact and easier to control, improving maneuverability between racks and narrow aisles.

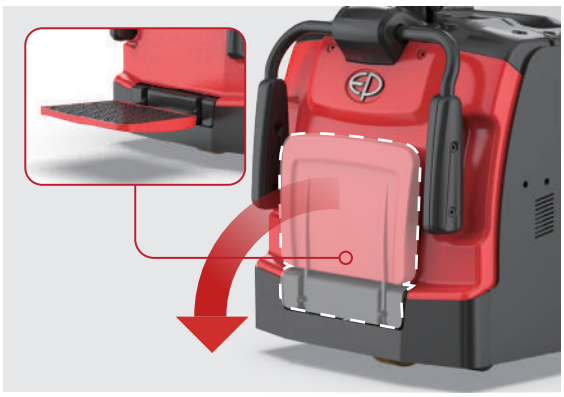

Effortless Steering and Smart Monitoring

The proportional electronic power steering effectively reduces operator fatigue while ensuring precise and smooth control. For added safety, the truck automatically slows down at turns, enhancing stability and maneuverability. The new color display provides a quick and clear overview of the truck and battery status, and the operator can monitor key information at a glance. With intelligent steering and real-time data access, the RSL161 ensures greater efficiency, comfort, and safety in warehouse operations.

Heavy-duty Li-ion Stacker with Foldable Platform 1600kg

RSL161/RSL161i

Distinguishing mark	1.1	Manufacturer			EP	EP
	1.2	Model designation			RSL161	RSL161i
	1.3	Drive			Electric	Electric
	1.4	Operator type			Pedestrian	Pedestrian
	1.5	Load capacity	Q	kg	1600	2000
	1.5.1	Load capacity，load with mast lift	Q_1	kg	\	1600
	1.5.2	Load capacity，load with support arm lift	Q_2	kg	\	2000
	1.6	Load center distance	c	mm	600	600
	1.8	Load distance，centre of drive axle to fork	x	mm	690	690
	1.9	Wheelbase	y	mm	1306	1650
Service weight	2.1	Service weight		kg	1200	1340
	2.2	Axle loading, laden front/rear		kg	1050/1750	1120/1820
	2.3	Axle loading, unladen front/rear		kg	690/510	760/580
Tyres/chassis	3.1	Tyre type			Polyurethane	Polyurethane
	3.2	Tyre size, front			230×90	Φ230x90
	3.3	Tyre size, rear			85×70	Φ85x70
	3.4	Additional wheels (castor wheels)		mm	130×55	Φ130x55
	3.5	Wheels, number front/rear (x=drive wheels)		mm	1x+2/4	1x+2/4
	3.6.1	Tread width, front	b_{10}	mm	634	634
	3.7.1	Tread width, rear	b_{11}	mm	385	385
Dimensions	4.0	Max. Lift Height	H	mm	3000	3000
	4.2	Retracted mast height	h_1	mm	1970	2015
	4.3	Free lift	h_2	mm	\	\
	4.4	Lift height	h_3	mm	2915	2915
	4.5	Height, mast extended	h_4	mm	3425	3495
	4.6	Initial lift	h_5	mm	\	120
	4.9	Height of tiller handle in drive position min./max.	h_{14}	mm	1125/1361	1125/1361
	4.10	Height of wheel arms	h_8	mm	\	\
	4.15	Lowered height	h_{13}	mm	90	92
	4.19	Overall length	l_1	mm	1961	2111
	4.20	Length to face of forks	l_2	mm	821	971
	4.21	Overall width	b_1/b_2	mm	850	850
	4.22	Fork dimensions	s×e×l	mm	65×170×1150	60/185/1150
	4.24	Fork carriage width	b_3	mm	750	750
	4.25	Fork spread	b_5	mm	570	570
	4.26	Distance between wheel arms/loading surfaces	b_4	mm	\	\
	4.31	Ground clearance, laden, below mast	m_1	mm	25	14
	4.32	Ground clearance, center of wheelbase	m_2	mm	25	14
	4.34.1	Aisle width for pallets 1000×1200 crossways	Ast	mm	2430	2708
	4.34.2	Aisle width for pallets 800×1200 lengthways	Ast	mm	2400	2602
	4.35	Turning radius	Wa	mm	1560	1900
Performance data	5.1	Travel speed, laden/unladen		km/h	9/11	9/11
	5.2	Lifting speed, laden/unladen		m/s	0.2/0.26	0.2/0.26
	5.3	Lowering speed, laden/unladen		m/s	0.4/0.36	0.4/0.36
	5.8	Max. gradeability, laden/unladen		%	8/12	8/16
	5.10	Service brake			Electromagnetic	Electromagnetic
Electric-engine	6.1	Drive motor rating S2 60 min		kW	3	3
	6.2	Lift motor rating at S3 15%		kW	4.5	4.5
	6.4	Battery voltage/nominal capacity		V/Ah	24V/205AH	24V/205AH
	6.5	Battery weight		kg	72	72
	6.6	Energy consumption according to DIN EN 16796		kWh/h	1.01	1.01
	6.7	Turnover output according to VDI 2198		t/h	54.4	54.4
	6.8	Turnover efficiency according to VDI 2198		t/kWh	37	37
Addition data	8.1	Type of drive control			AC	AC
	10.5	Steering design			Electronic	Electronic
	10.7	Sound pressure level at the driver's ear		dB(A)	74	74
	15.1	Charger output current		A	100	100

RSL161

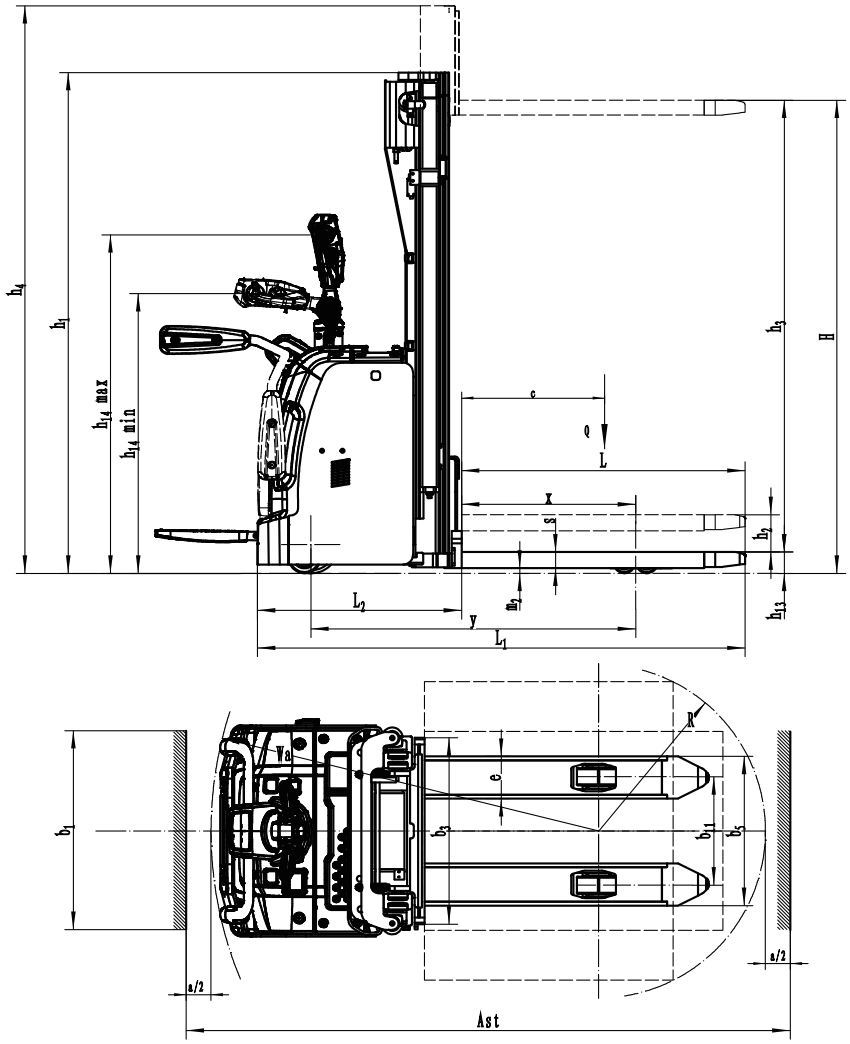

RSL161i

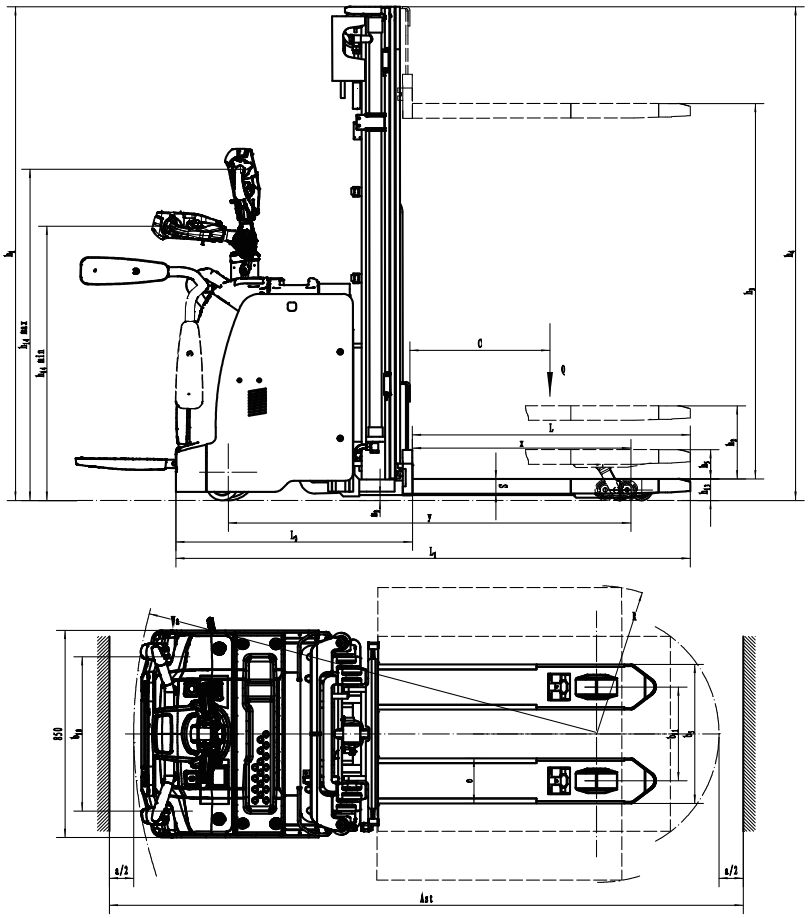

Mast Option:

Mast types	Lift height h3+h13(mm)	Height, mast lowered(h1)	Height,Free lift (h2)	Height, mast extended (h4)
2-Wide Mast	2600	1815	\	3095
	3000	2015	\	3495
	3300	2185	\	3835
	3600	2312	\	4089
	3900	2462	\	4389
	4150	2592	\	4649
2-Free Mast	2650	1815	1320	3118
	2950	1962	1470	3412
	3250	2115	1620	3718
3-Free Mast	4000	1820	1345	4445
	4500	2020	1545	4945
	4800	2115	1645	5245
	5000	2185	1715	5445
	5500	2385	1915	5945

RATED CAPACITIES GRAPH(RSL161)

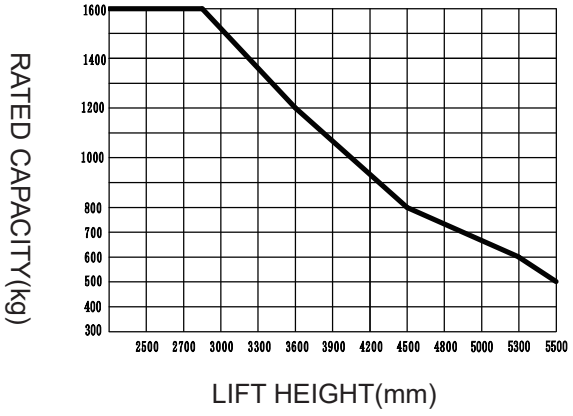

RATED CAPACITIES GRAPH(RSL161i)

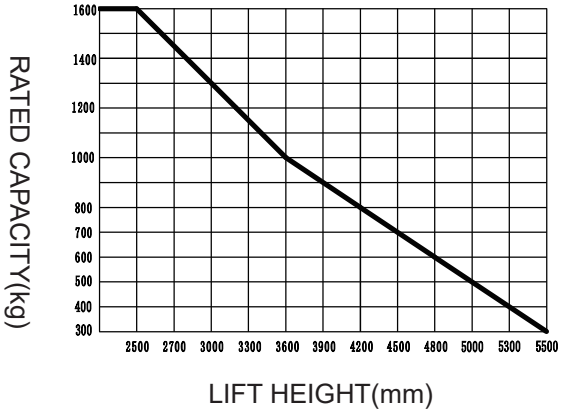

Option:

OPTION	RSL161	RSL161i
Fork dimension	●1150*570○1150*685	●1150*570○1150*685
Load wheel type	●Double	●Double
Load wheel material	●PU	●PU
Drive wheel material	●PU○Carved PU○Rubber	●PU○Carved PU○Rubber
Battery capacity	○205Ah（Li-ion）○280AH（Li-ion）	○205Ah（Li-ion）○280AH（Li-ion）
Charger	○24V-50A External（Li-ion）○24V-100A External (Li-ion）	○24V-50A External（Li-ion）○24V-100A External (Li-ion）
Battery indicator	●With hourmeter （Bluetooth）	●With hourmeter （Bluetooth）
Castor wheels	●Yes and not customized	●Yes and not customized
Buzzer	●No○Yes and not customized	●No○Yes and not customized
USB interface	●Yes and not customized	●Yes and not customized
Telematics	●No○Yes and not customized	●No○Yes and not customized
Turn speed control	●Yes and not customized	●Yes and not customized
Heating system for lithium battery charging	●No○Yes and not customized	●No○Yes and not customized
Speed reduction with elevated mast	●Yes and not customized	●Yes and not customized
Operator identification device	●Pin code○Card reader	●Pin code○Card reader
Lifting electronic limit	●Yes and not customized	●Yes and not customized
lifting and lowering function	● Proportional lifting	● Proportional lifting
Note： ●Standard ○ Optional - Inconformity		